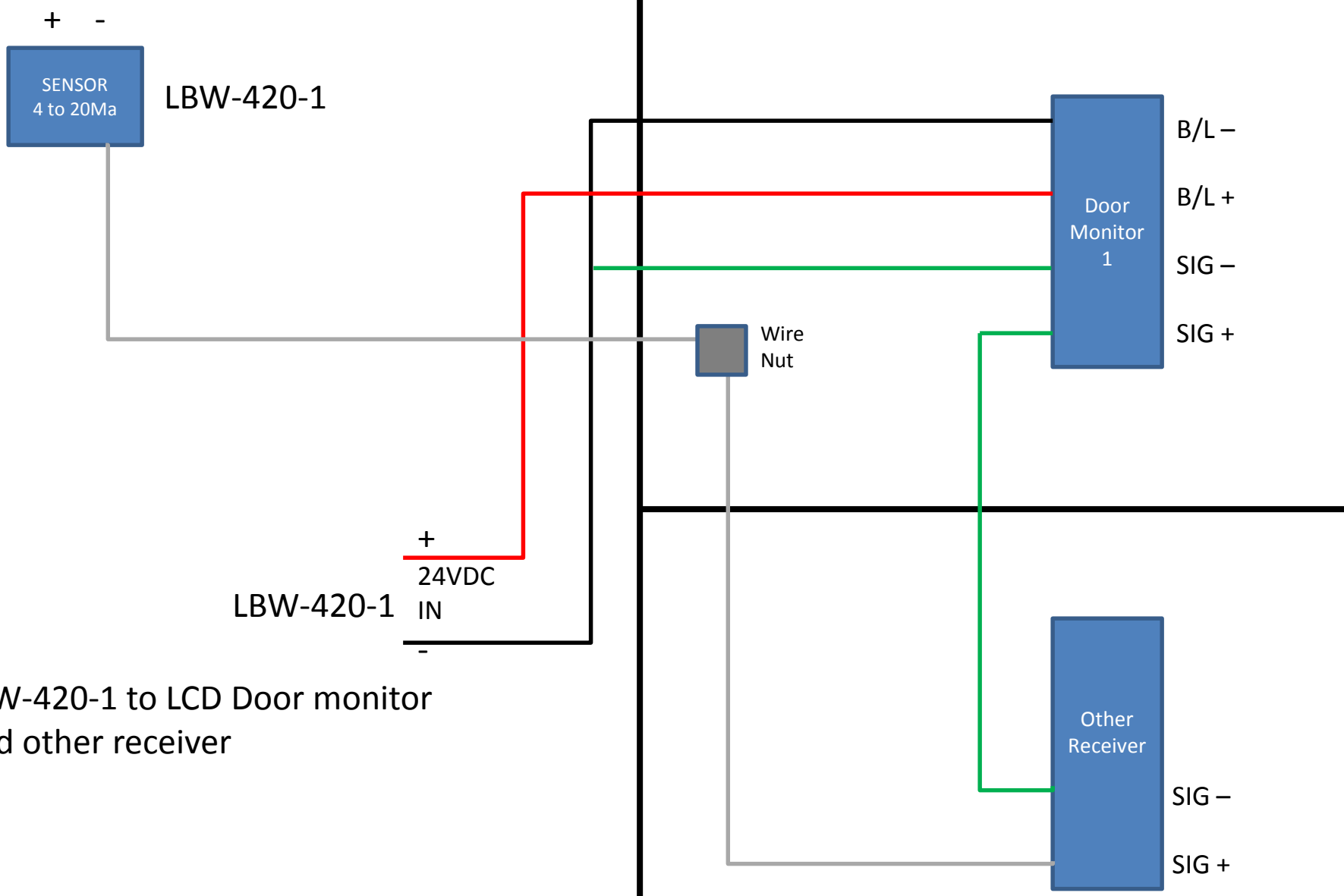

LBW-420-1 to LCD Door monitor
And other receiver